SDMT

Compatible Workpiece Materials

S Heat-Resistant Steel

P Steel

M Stainless Steel

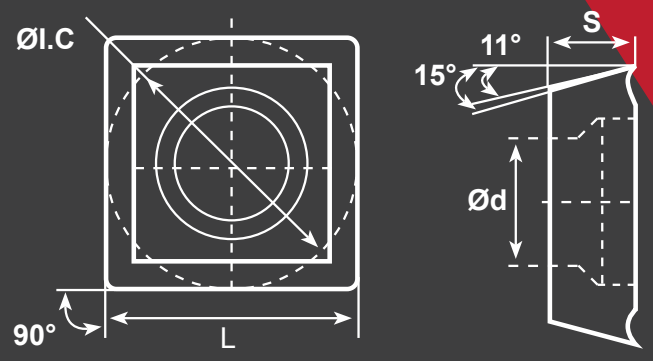

SKU#	ANSI#	ISO#	L	ØI.C	S	Ød	r	R	K
424-1487	SDMT-32.53-DM	SDMT09T312DM	0.375	0.375	0.156	0.157	0.047	0.098	0.034
424-1488	SDMT433-DM	SDMT120412DM	0.5	0.5	0.187	0.173	0.047	0.157	0.037

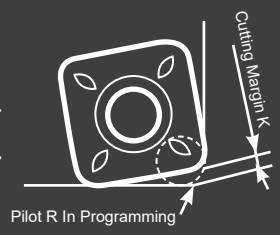

			START SPEED	START FEED
424-1487	Ø0.75/1	P	Vc: 450sfm (300-650)	fz: 0.031in/z (0.024-0.055)
		M	Vc: 400sfm (260-600)	fz: 0.047in/z (0.039-0.055)
	Ø1.25	P	Vc: 450sfm (300-650)	fz: 0.031in/z (0.024-0.055)
		M	Vc: 400sfm (260-600)	fz: 0.047in/z (0.039-0.055)
	Ø1.50	P	Vc: 450sfm (300-650)	fz: 0.031in/z (0.024-0.055)
		M	Vc: 400sfm (260-600)	fz: 0.047in/z (0.039-0.055)
	Ø2/2.50	P	Vc: 450sfm (300-650)	fz: 0.031in/z (0.024-0.055)
		M	Vc: 400sfm (260-600)	fz: 0.047in/z (0.039-0.055)
	Ø3/4/5/6	P	Vc: 450sfm (300-650)	fz: 0.031in/z (0.024-0.055)
		M	Vc: 400sfm (260-600)	fz: 0.047in/z (0.039-0.055)

			START SPEED	START FEED
424-1488	Ø0.75/1	P	Vc: 450sfm (300-650)	fz: 0.031in/z (0.024-0.055)
		M	Vc: 400sfm (260-600)	fz: 0.047in/z (0.039-0.055)
	Ø1.25	P	Vc: 450sfm (300-650)	fz: 0.031in/z (0.024-0.055)
		M	Vc: 400sfm (260-600)	fz: 0.047in/z (0.039-0.055)
	Ø1.50	P	Vc: 450sfm (300-650)	fz: 0.031in/z (0.024-0.055)
		M	Vc: 400sfm (260-600)	fz: 0.047in/z (0.039-0.055)
	Ø2/2.50	P	Vc: 450sfm (300-650)	fz: 0.031in/z (0.024-0.055)
		M	Vc: 400sfm (260-600)	fz: 0.047in/z (0.039-0.055)
	Ø3/4/5/6	P	Vc: 450sfm (300-650)	fz: 0.031in/z (0.024-0.055)
		M	Vc: 400sfm (260-600)	fz: 0.047in/z (0.039-0.055)

	Coated Grade								Uncoated Grade		
	YBC302	YBM251	YBM253	YBM351	YBG102	YBG202	YBG212	YBG205	YBG302	YD101	YD201
P Steel	O	O	O	—		O	O	—			
M Stainless Steel	O	O	O	—		O	O	—			
K Cast Iron					+					—	
N Ferrite Materials									O	—	
S Heat-resistant steel					+	O	O				
SKU#											
424-1487						●					
424-1488						●					

+ Good Working Conditions O General Working Conditions — Adverse Working Conditions

DM CHIP BREAKER

The DM chip breaker is the preferred choice chip breaker on P category material semi-finishM Class tolerance double sided chip breaker, light cutting force with wide chipping range, can achieve better result on high adhesive alloy steels.

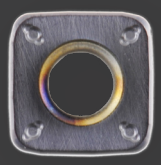

© Shars Tool Company 2020